Sri Ranganathar Valves (P) Ltd

Quality flow in every valve

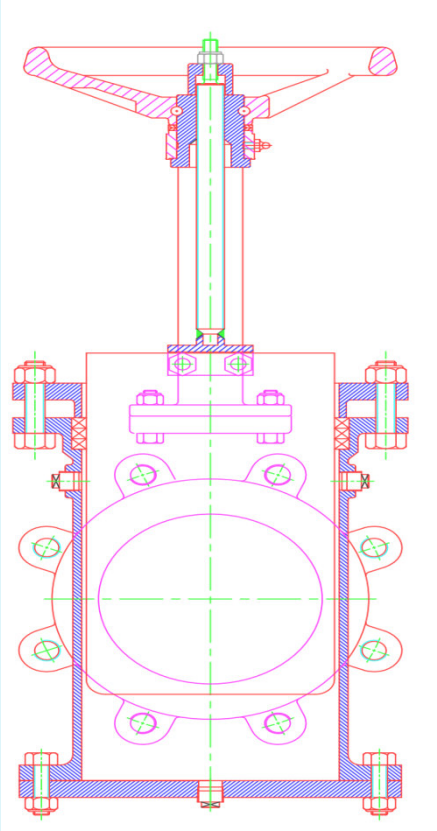

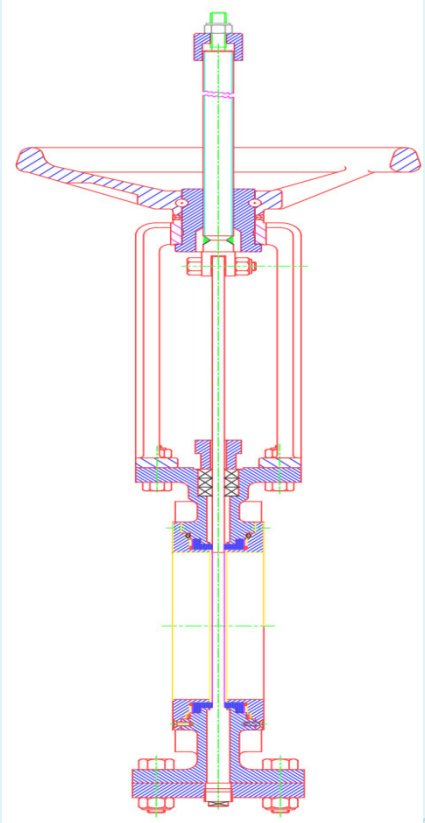

KNIFE GATE VALVE – Bi-Directional Face Sealing Resilient Seat – Model - 64

ISO 9001 : 2015 / ISO 45001 : 2018 / ISO 14001 : 2015 /
PED / API 6D / API 600 / API 603 / API 20A

KNIFE GATE VALVE - BI-DIRECTIONAL FACE SEALING RESILIENT SEAT - MODEL 64

DESIGN SPECIFICATIONS	
GENERAL VALVE DESIGN	MSS SP-81
PRESSURE TEMPRATURE RATING	AS PER DRAWING
FLANGE DESIGN TO SUIT	ASME B16.5
FACE TO FACE DIMENSION	MSS SP-81
MATERIALS	ASTM
VALVE TESTING	MSS SP-81/MSS SP-151

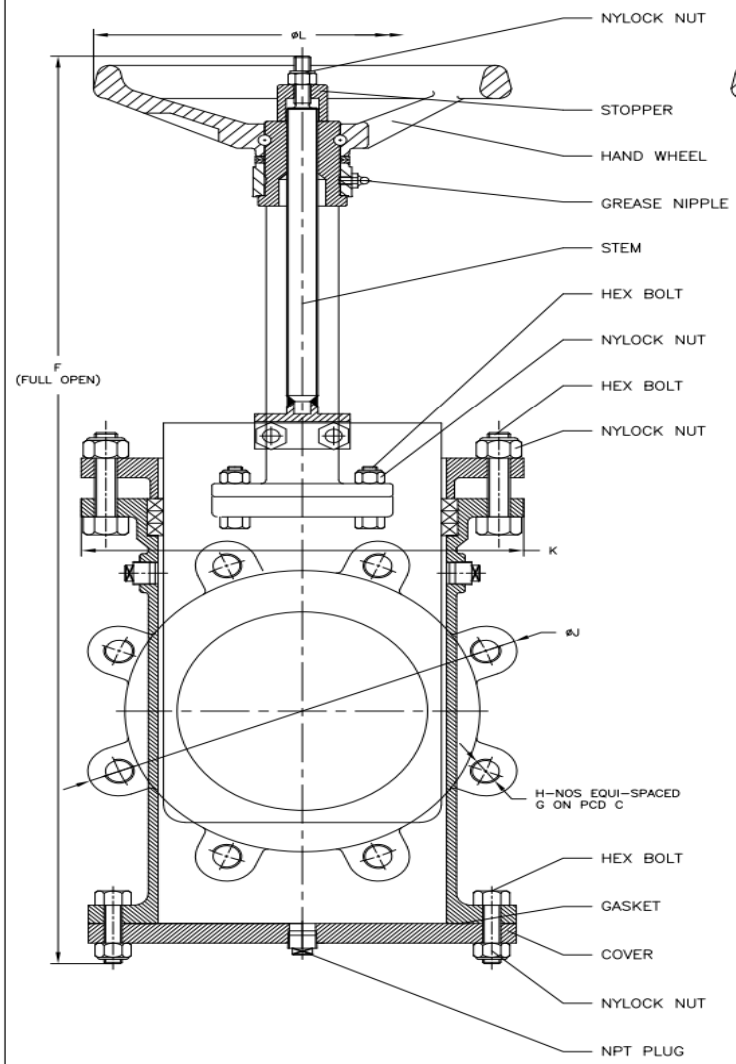

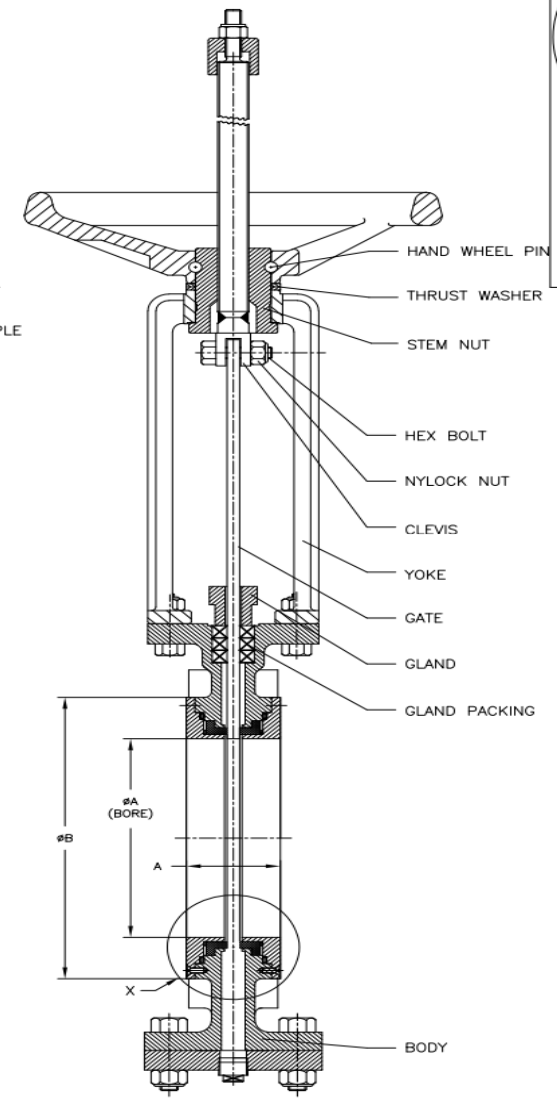

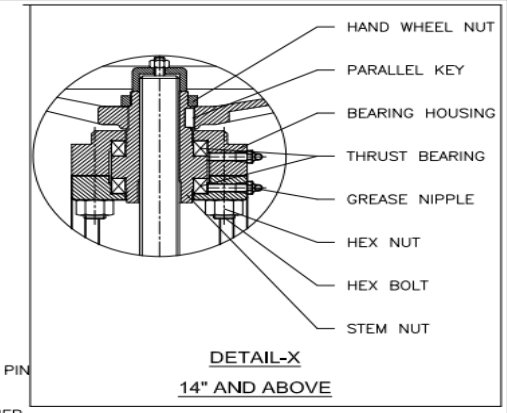

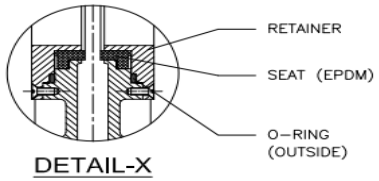

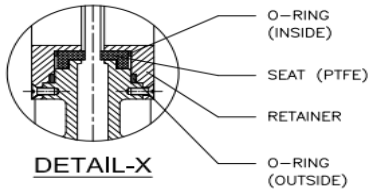

EXECUTION OPTIONS

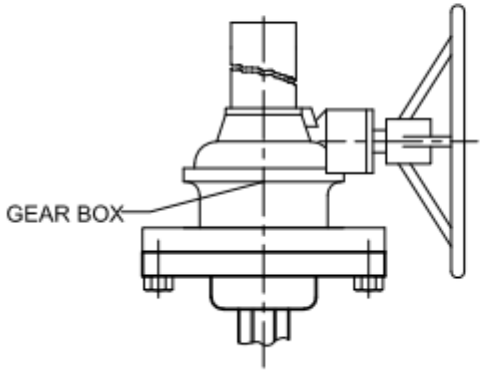

GEAR OPERATOR

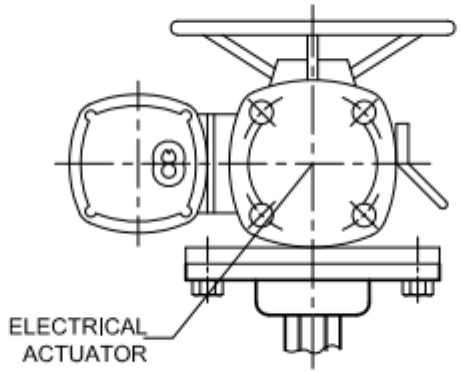

ELECTRICAL ACTUATOR

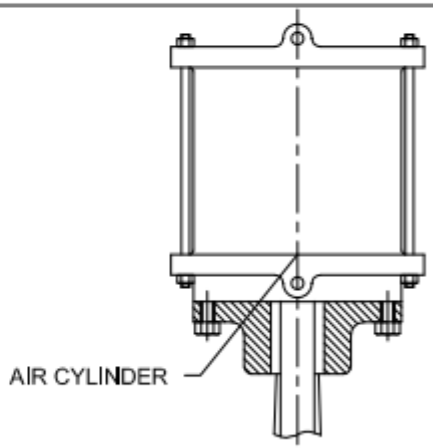

AIR / HYDRAULIC CYLINDER

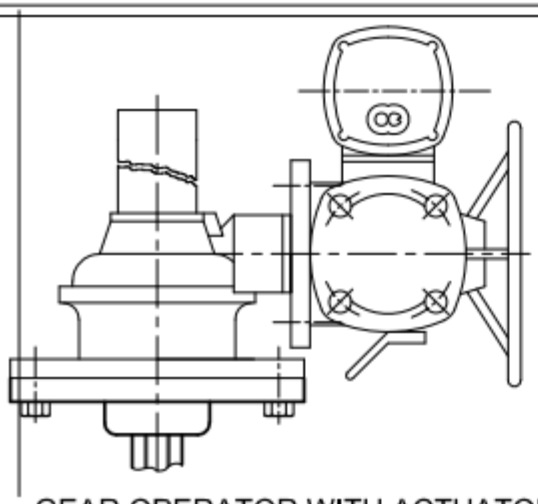

GEAR OPERATOR WITH ACTUATOR

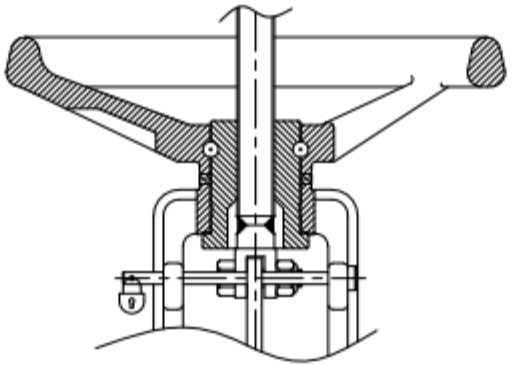

LOCKING ARRANGEMENT

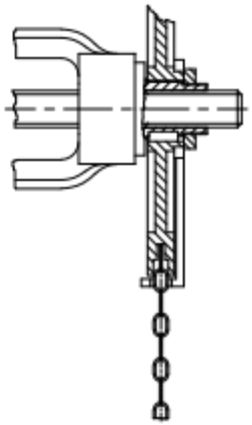

CHAIN WHEEL

BILL OF MATERIAL

PART NAME	A 216-WCB	WCC	A 217-WC6	WC9	A 217-C5	C9	C12	A 352-LCB	LCC	A 351-CF8	A 351-CF8M	A 351-CF3	A 351-CF3M
BODY	A 216-WCB	WCC	A 217-WC6	WC9	A 217-C5	C9	C12	A 352-LCB	LCC	A 351-CF8	A 351-CF8M	A 351-CF3	A 351-CF3M
SCREW	SS 316		SS 316		SS 316			SS 316		SS 316		SS 316	
SEAT	EPDM / VITON / PTFE / RTFE		EPDM / VITON / PTFE / RTFE		EPDM / VITON / PTFE / RTFE			EPDM / VITON / PTFE / RTFE		EPDM / VITON / PTFE / RTFE		EPDM / VITON / PTFE / RTFE	
RETAINER	A 216-WCB	WCC	A 217-WC6	WC9	A 217-C5	C9	C12	A 352-LCB	LCC	A 351-CF8	A 351-CF8M	A 351-CF3	A 351-CF3M
O-RING	EPDM / VITON		EPDM / VITON		EPDM / VITON			EPDM / VITON		EPDM / VITON		EPDM / VITON	
GLAND PACKING	BRAIDED PTFE		BRAIDED PTFE		BRAIDED PTFE			BRAIDED PTFE		BRAIDED PTFE		BRAIDED PTFE	
GLAND	A 216-WCB	WCC	A 217-WC6	WC9	A 217-C5	C9	C12	A 352-LCB	LCC	A 351-CF8	A 351-CF8M	A 351-CF3	A 351-CF3M
GATE	SS 304		SS 304		SS 304			SS 304		SS 304	SS 316	SS 304L	SS 316L
YOKE	A 216-WCB		A 216-WCB		A 216-WCB			A 216-WCB		A 351-CF8		A 351-CF8	
CLEVIS	A 351-CF8		A 351-CF8		A 351-CF8			A 351-CF8		A 351-CF8		A 351-CF8	
NYLOCK NUT (GATE/CLEVIS)	A 194-2H		A 194-2H		A 194-2H			A 194-2H		SS 304		SS 304	
HEX BOLT (GATE/CLEVIS)	A 193-B7		A 193-B7		A 193-B7			A 193-B7		SS 304		SS 304	
STEM NUT	AB-1 / A 439-D2		AB-1 / A 439-D2		AB-1 / A 439-D2			AB-1 / A 439-D2		AB-1 / A 439-D2		AB-1 / A 439-D2	
THRUST WASHER	AB-1 / A 439-D2		AB-1 / A 439-D2		AB-1 / A 439-D2			AB-1 / A 439-D2		AB-1 / A 439-D2		AB-1 / A 439-D2	
HAND WHEEL PIN	SS 410		SS 410		SS 410			SS 410		SS 410		SS 410	
NYLOCK NUT (BODY/GLAND)	A 194-2H		A 194-2H / 7		A 194-2H			A 194-2H / 7		SS 304		SS 304	
HEX BOLT (BODY/GLAND)	A 193-B7		A 193-B7 / B16		A 193-B7			A 320-L7 / A 193-B7		SS 304		SS 304	
NYLOCK NUT (BODY/YOKE)	A 194-2H		A 194-2H		A 194-2H			A 194-2H		SS 304		SS 304	
HEX BOLT (BODY/YOKE)	A 193-B7		A 193-B7		A 193-B7			A 193-B7		SS 304		SS 304	
STEM	SS 304		SS 304		SS 304			SS 304		SS 304		SS 304	
GREASE NIPPLE	SS 304		SS 304		SS 304			SS 304		SS 304		SS 304	
HAND WHEEL	CAST STEEL/DUCTILE IRON		CAST STEEL/DUCTILE IRON		CAST STEEL/DUCTILE IRON			CAST STEEL/DUCTILE IRON		CAST STEEL/DUCTILE IRON		CAST STEEL/DUCTILE IRON	
O-RING (INSIDE)	EPDM / VITON		EPDM / VITON		EPDM / VITON			EPDM / VITON		EPDM / VITON		EPDM / VITON	
STOPPER	SS 304 / A 351-CF8		SS 304 / A 351-CF8		SS 304 / A 351-CF8			SS 304 / A 351-CF8		SS 304 / A 351-CF8		SS 304 / A 351-CF8	
NYLOCK NUT (STOPPER)	A 194-2H		A 194-2H		A 194-2H			A 194-2H		SS 304		SS 304	
HEX BOLT (YOKE/BRG HSG)	A 193-B7		A 193-B7		A 193-B7			A 193-B7		SS 304		SS 304	
HEX NUT (YOKE/BRG HSG)	A 194-2H		A 194-2H		A 194-2H			A 194-2H		SS 304		SS 304	
THRUST BEARING	COMMERCIAL		COMMERCIAL		COMMERCIAL			COMMERCIAL		COMMERCIAL		COMMERCIAL	
BEARING HOUSING	A 216-WCB		A 216-WCB		A 216-WCB			A 216-WCB		A 351-CF8		A 351-CF8	
PARALLEL KEY	C40		C40		C40			C40		C40		C40	
HAND WHEEL NUT	C 45 (BLACKODISED)		C 45 (BLACKODISED)		C 45 (BLACKODISED)			C 45 (BLACKODISED)		C 45 (BLACKODISED)		C 45 (BLACKODISED)	
STUD	A 193-B7		A 193-7		A 193-B7			A 193-7		A 193-B8		A 193-B8	
HEAVY HEX NUT	A 194-2H		A 194-B16		A 194-2H			A 320-L7		A 194-8		A 194-8	
GASKET	PTFE		PTFE		PTFE			PTFE		PTFE		PTFE	
BONNET	A 216-WCB	WCC	A 217-WC6	WC9	A 217-C5	C9	C12	A 352-LCB	LCC	A 351-CF8	A 351-CF8M	A 351-CF3	A 351-CF3M
GLAND BUSH	SS 410 / A 217-CA15		SS 410 / A 217-CA15		SS 410 / A 217-CA15			SS 304 / A 351-CF8		A 351-CF8	A 351-CF8M	A 351-CF3	A 351-CF3M
GLAND FLANGE	A 216-WCB	WCC	A 217-WC6	WC9	A 217-C5	C9	C12	A 352-LCB	LCC	A 351-CF8	A 351-CF8M	A 351-CF8	A 351-CF8M
NPT PLUG	SS 304		SS 304		SS 304			SS 304		SS 304	SS 316	SS 304L	SS 316L
HEX BOLT (YOKE/ADAPTER)	A 193-B7		A 193-B7		A 193-B7			A 193-B7		SS 304		SS 304	
STEM BUSH	AB-1 / A 439-D2		AB-1 / A 439-D2		AB-1 / A 439-D2			AB-1 / A 439-D2		AB-1 / A 439-D2		AB-1 / A 439-D2	
ADAPTER	A 216-WCB		A 216-WCB		A 216-WCB			A 216-WCB		A 351-CF8		A 351-CF8	
STEM HEAD	A 216-WCB		A 216-WCB		A 216-WCB			A 216-WCB		A 351-CF8		A 351-CF8	
HINGE	A 216-WCB		A 216-WCB		A 216-WCB			A 216-WCB		A 351-CF8		A 351-CF8	
PIN	SS 304		SS 304		SS 304			SS 304		SS 304		SS 304	
LEVER	MS		MS		MS			MS		MS		MS	
GEAR BOX	COMMERCIAL		COMMERCIAL		COMMERCIAL			COMMERCIAL		COMMERCIAL		COMMERCIAL	
AIR CYLINDER ACTUATOR	COMMERCIAL		COMMERCIAL		COMMERCIAL			COMMERCIAL		COMMERCIAL		COMMERCIAL	
ELECTRICAL ACTUATOR	COMMERCIAL		COMMERCIAL		COMMERCIAL			COMMERCIAL		COMMERCIAL		COMMERCIAL	

PART NAME	A 351-CG8M	A 351-CG3M	A 351-CF8C	A 351-CN7M	A 351-CK3MCuN	A 351-CN3MN	A 995-4A	A 995-6A	A 494-CZ100	A 494-M35-1	A 494-CW12MW	A 494-CW6MC
BODY	A 351-CG8M	A 351-CG3M	A 351-CF8C	A 351-CN7M	A 351-CK3MCuN	A 351-CN3MN	A 995-4A	A 995-6A	A 494-CZ100	A 494-M35-1	A 494-CW12MW	A 494-CW6MC
SCREW	SS 316		SS 316		SS 316		SS 316		SS 316		SS 316	
SEAT	EPDM / VITON / PTFE / RTFE		EPDM / VITON / PTFE / RTFE		EPDM / VITON / PTFE / RTFE		EPDM / VITON / PTFE / RTFE		EPDM / VITON / PTFE / RTFE		EPDM / VITON / PTFE / RTFE	
RETAINER	A 351-CG8M	A 351-CG3M	A 351-CF8C	A 351-CN7M	A 351-CK3MCuN	A 351-CN3MN	A 995-4A	A 995-6A	A 494-CZ100	A 494-M35-1	A 494-CW12MW	A 494-CW6MC
O-RING	EPDM / VITON		EPDM / VITON		EPDM / VITON		EPDM / VITON		EPDM / VITON		EPDM / VITON	
GLAND PACKING	BRAIDED PTFE		BRAIDED PTFE		BRAIDED PTFE		BRAIDED PTFE		BRAIDED PTFE		BRAIDED PTFE	
GLAND	A 351-CG8M	A 351-CG3M	A 351-CF8C	A 351-CN7M	A 351-CK3MCuN	A 351-CN3MN	A 995-4A	A 995-6A	A 494-CZ100	A 494-M35-1	A 494-CW12MW	A 494-CW6MC
GATE	SS 317	SS 317L	SS 347	A 20	S31254	AL6XN	S31803	S32760	UNS N02200	UNS N04400	UNS N10002	UNS N06625
YOKE	A 351-CF8		A 351-CF8		A 351-CF8		A 351-CF8		A 351-CF8		A 351-CF8	
CLEVIS	A 351-CF8		A 351-CF8		A 351-CF8		A 351-CF8		A 351-CF8		A 351-CF8	
NYLOCK NUT (GATE/CLEVIS)	SS 304		SS 304		SS 304		SS 304		SS 304		SS 304	
HEX BOLT (GATE/CLEVIS)	SS 304		SS 304		SS 304		SS 304		SS 304		SS 304	
STEM NUT	AB-1 / A 439-D2		AB-1 / A 439-D2		AB-1 / A 439-D2		AB-1 / A 439-D2		AB-1 / A 439-D2		AB-1 / A 439-D2	
THRUST WASHER	AB-1 / A 439-D2		AB-1 / A 439-D2		AB-1 / A 439-D2		AB-1 / A 439-D2		AB-1 / A 439-D2		AB-1 / A 439-D2	
HAND WHEEL PIN	SS 410		SS 410		SS 410		SS 410		SS 410		SS 410	
NYLOCK NUT (BODY/GLAND)	SS 304		SS 304		SS 304		SS 304		SS 304		SS 304	
HEX BOLT (BODY/GLAND)	SS 304		SS 304		SS 304		SS 304		SS 304		SS 304	
NYLOCK NUT (BODY/YOKE)	SS 304		SS 304		SS 304		SS 304		SS 304		SS 304	
HEX BOLT (BODY/YOKE)	SS 304		SS 304		SS 304		SS 304		SS 304		SS 304	
STEM	SS 304		SS 304		SS 304		SS 304		SS 304		SS 304	
GREASE NIPPLE	SS 304		SS 304		SS 304		SS 304		SS 304		SS 304	
HAND WHEEL	CAST STEEL/DUCTILE IRON		CAST STEEL/DUCTILE IRON		CAST STEEL/DUCTILE IRON		CAST STEEL/DUCTILE IRON		CAST STEEL/DUCTILE IRON		CAST STEEL/DUCTILE IRON	
O-RING (INSIDE)	EPDM / VITON		EPDM / VITON		EPDM / VITON		EPDM / VITON		EPDM / VITON		EPDM / VITON	
STOPPER	SS 304 / A 351-CF8		SS 304 / A 351-CF8		SS 304 / A 351-CF8		SS 304 / A 351-CF8		SS 304 / A 351-CF8		SS 304 / A 351-CF8	
NYLOCK NUT (STOPPER)	SS 304		SS 304		SS 304		SS 304		SS 304		SS 304	
HEX BOLT (YOKE/BRG HSG)	SS 304		SS 304		SS 304		SS 304		SS 304		SS 304	
HEX NUT (YOKE/BRG HSG)	SS 304		SS 304		SS 304		SS 304		SS 304		SS 304	
THRUST BEARING	COMMERCIAL		COMMERCIAL		COMMERCIAL		COMMERCIAL		COMMERCIAL		COMMERCIAL	
BEARING HOUSING	A 351-CF8		A 351-CF8		A 351-CF8		A 351-CF8		A 351-CF8		A 351-CF8	
PARALLEL KEY	C40		C40		C40		C40		C40		C40	
HAND WHEEL NUT	C 45 (BLACKODISED)		C 45 (BLACKODISED)		C 45 (BLACKODISED)		C 45 (BLACKODISED)		C 45 (BLACKODISED)		C 45 (BLACKODISED)	
STUD	A 193-B8		A 193-B8	A 193-B8M	A 193-B8M		A 193-B8M		A 193-B8M		A 193-B8M	
HEAVY HEX NUT	A 194-8		A 194-8	A 194-8M	A 194-8M		A 194-8M		A 194-8M		A 194-8M	
GASKET	PTFE		PTFE		PTFE		PTFE		PTFE		PTFE	
BONNET	A 351-CG8M	A 351-CG3M	A 351-CF8C	A 351-CN7M	A 351-CK3MCuN	A 351-CN3MN	A 995-4A	A 995-6A	A 494-CZ100	A 494-M35-1	A 494-CW12MW	A 494-CW6MC
GLAND BUSH	A 351-CG8M	A 351-CG3M	A 351-CF8C	A 351-CN7M	A 351-CK3MCuN	A 351-CN3MN	A 995-4A	A 995-6A	A 494-CZ100	A 494-M35-1	A 494-CW12MW	A 494-CW6MC
GLAND FLANGE	A 351-CF8M		A 351-CF8M		A 351-CF8M		A 351-CF8M		A 351-CF8M		A 351-CF8M	
NPT PLUG	SS 317	SS 317L	SS 347	A 20	S31254	AL6XN	S31803	S32760	UNS N02200	UNS N04400	UNS N10002	UNS N06625
HEX BOLT (YOKE/ADAPTER)	SS 304		SS 304		SS 304		SS 304		SS 304		SS 304	
STEM BUSH	AB-1 / A 439-D2		AB-1 / A 439-D2		AB-1 / A 439-D2		AB-1 / A 439-D2		AB-1 / A 439-D2		AB-1 / A 439-D2	
ADAPTER	A 351-CF8		A 351-CF8		A 351-CF8		A 351-CF8		A 351-CF8		A 351-CF8	
STEM HEAD	A 351-CF8		A 351-CF8		A 351-CF8		A 351-CF8		A 351-CF8		A 351-CF8	
HINGE	A 351-CF8		A 351-CF8		A 351-CF8		A 351-CF8		A 351-CF8		A 351-CF8	
PIN	SS 304		SS 304		SS 304		SS 304		SS 304		SS 304	
LEVER	MS		MS		MS		MS		MS		MS	
GEAR BOX	COMMERCIAL		COMMERCIAL		COMMERCIAL		COMMERCIAL		COMMERCIAL		COMMERCIAL	
AIR CYLINDER ACTUATOR	COMMERCIAL		COMMERCIAL		COMMERCIAL		COMMERCIAL		COMMERCIAL		COMMERCIAL	
ELECTRICAL ACTUATOR	COMMERCIAL		COMMERCIAL		COMMERCIAL		COMMERCIAL		COMMERCIAL		COMMERCIAL	

DIMENSION

CWP 150	SIZE	INCH	2	2 1/2	3	4	5	6	8	10	12	14	16	18	20	24	30	36	42	48	54	60
		mm	50	65	80	100	127	150	200	250	300	350	400	450	500	600	750	900	1050	1200	1350	1500
	ØA	INCH	2.00	2.50	3.00	4.00	5.00	6.00	8.00	10.00	12.00	13.25	15.25	17.25	19.25	23.25	29.25	35.25	41.25	47.25	53.25	59.25
		mm	50.8	63.5	76.2	101.6	127.0	152.4	203.0	254.0	304.8	336.5	387.3	438.1	488.9	590.5	742.9	898.3	1047.7	1200.1	1353.0	1505.0
	ØB	INCH	3.62	4.50	5.00	6.19	7.30	8.50	10.62	12.75	15.00	16.25	18.50	21.00	23.00	27.25	33.70	40.20	47.00	53.50	59.48	66.00
		mm	91.9	114.3	127.0	157.2	185.4	215.9	269.7	323.8	381.0	412.7	469.9	533.4	584.2	692.1	856.0	1021.0	1193.8	1358.9	1511.0	1676.0
	ØC	INCH	4.75	5.50	6.00	7.50	8.50	9.50	11.75	14.25	17.00	18.75	21.25	22.75	25.00	29.50	36.00	42.75	49.50	56.00	62.75	69.25
		mm	120.7	139.7	152.4	190.5	215.9	241.3	298.5	362.0	431.8	476.3	539.8	577.9	635.0	749.3	914.4	1085.9	1257.3	1422.4	1593.8	1759.0
	D	INCH	1.88	2.00	2.00	2.00	2.25	2.25	2.75	2.75	3.00	3.00	3.50	3.50	4.50	4.50	5.75	6.50	7.00	8.00	9.00	10.00
		mm	47.8	50.8	50.8	50.8	57.2	57.2	69.9	69.9	76.2	76.2	88.9	88.9	114.3	114.3	146.0	165.1	177.8	203.2	228.6	254.0
	F	INCH	15.5	19.3	19.3	23.0	26.2	29.3	36.3	44.0	51.0	57.0	66.0	73.0	79.5	93.0	131.9	151.9	160.0	177.6	196.4	222.2
		mm	394	490	490	584	665	743	921	1118	1295	1448	1676	1854	2019	2362	3350	3858	4064	4511	4988	5643
	ØG	INCH mm	5/8	5/8	5/8	5/8	3/4	3/4	3/4	7/8	7/8	1	1	1 1/8	1 1/8	1 1/4	1 1/4	1 1/2	1 1/2	1 1/2	1 3/4	1 3/4
	H	INCH mm	4	4	4	8	8	8	8	12	12	12	16	16	20	20	28	32	36	44	44	52
	ØJ	INCH	6.00	7.00	7.50	9.00	10.00	11.00	13.50	16.00	19.00	21.00	23.50	25.00	27.50	32.00	38.75	46.00	53.00	59.50	66.25	73.00
		mm	152.4	177.8	190.5	228.6	254.0	279.4	342.9	406.4	482.6	533.4	596.9	635.0	698.5	812.8	984.3	1168.4	1346.2	1511.3	1682.8	1854.2
	K	INCH	6.14	7.16	7.16	8.66	10.55	10.55	10.07	15.60	18.66	18.58	20.94	20.07	22.50	26.31	38.70	46.00	51.40	55.69	69.88	76.70
		mm	156.0	182.0	182.0	220.0	268.0	268.0	256.0	395.0	474.0	472.0	532.0	510.0	571.0	668.5	984.0	1168.0	1304.0	1440.0	1775.0	1948.0
	ØL	INCH	8.0	8.0	8.0	10.0	10.0	12.0	16.0	20.9	20.9	24.8	24.8	24.8	30.0	30.0	38.8	46.0	BGO	BGO	BGO	BGO
		mm	203	203	203	254	254	305	406	530	530	630	630	630	762	762	984	1168				
	P	INCH	---	---	15.7	17.7	---	25.6	39.4	68.9	88.6	---	---	---	---	---	---	---	---	---	---	---
		mm	---	---	400	450	---	650	1000	1750	2250	---	---	---	---	---	---	---	---	---	---	---

CWP 75	SIZE	30	36	42	48	54	60
		750	900	1050	1200	1350	1500
	ØA	29.25	35.25	41.25	47.25	53.25	59.25
		742.9	898.3	1047.7	1200.1	1353.0	1505.0
	ØB	33.70	40.20	47.00	53.50	59.48	66.00
		856.0	1021.0	1193.8	1358.9	1511.0	1676.0
	ØC	36.00	42.75	49.50	56.00	62.75	69.25
		914.4	1085.9	1257.3	1422.4	1593.8	1759.0
	D	5.40	6.30	5.42	5.85	7.50	8.50
		136.0	160.0	137.8	148.8	190.5	215.9
	F	131.9	151.9	160.0	177.6	196.4	222.2
		3350	3858	4064	4511	4988	5643
	ØG	1 1/4	1 1/2	1 1/2	1 1/2	1 3/4	1 3/4
	H	28	32	36	44	44	52
	ØJ	38.75	46.00	53.00	59.50	66.25	73.00
		984.3	1168.4	1346.2	1511.3	1682.8	1854.2
	K	38.70	46.00	51.40	55.69	69.88	76.70
		984.0	1168.0	1304.0	1440.0	1775.0	1948.0
	ØL	38.8	46.0	BGO	BGO	BGO	BGO
		984	1168				

Sri Ranganathar Valves (P) Ltd

7/109 – Thennampalayam Pirivu, Arasur,
Coimbatore – 641407
Tamilnadu, India.

Phone : +91 422 433 5999
Mobile : +91 99528 44102
Email: srv@sriindia.net