Sri Ranganathar Valves (P) Ltd

Quality flow in every valve

KNIFE GATE VALVE – NON RAISING STEM

ISO 9001 : 2015 / ISO 45001 : 2018 / ISO 14001 : 2015 /

PED / API 6D / API 600 / API 603 / API 20A

GENERAL ASSEMBLY

DESIGN SPECIFICATIONS	
GENERAL VALVE DESIGN	MSS SP-81
LUGGED DESIGN TO SUIT	ASME B 18.5
FACE TO FACE DIMENSION	MSS SP-81
MATERIALS	ASTM (AS LISTED BELOW)
VALVE TESTING	MSS SP-81/SP 151

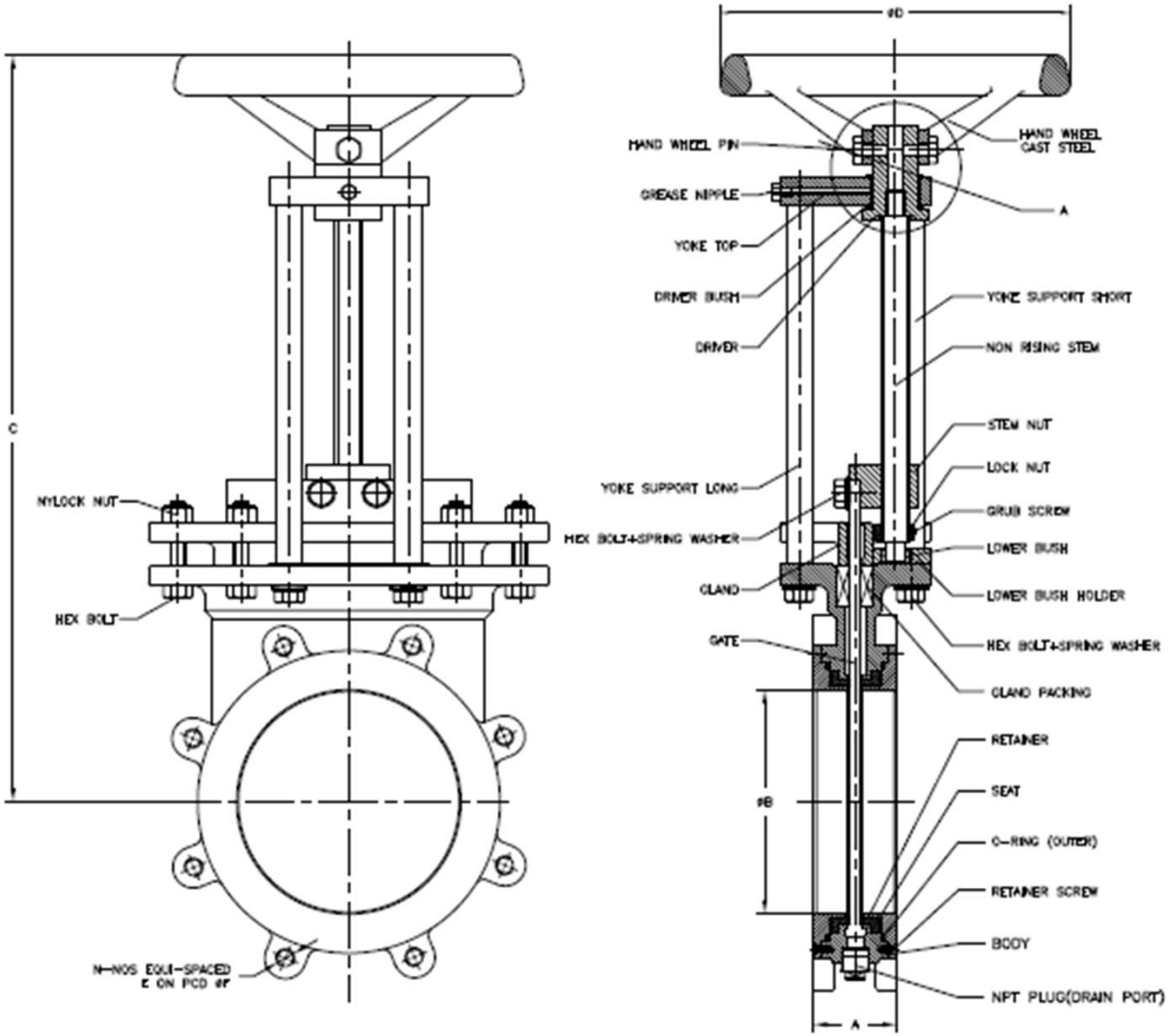

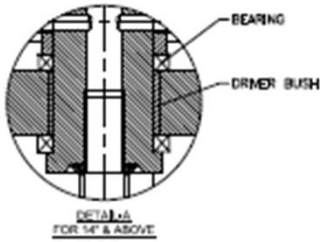

BILL OF MATERIAL

PART NAME	A 216-WCB	WCC	A 217-WC6	WC9	A 217-C5	C9	C12	A 352-LCB	LCC
BODY	A 216–WCB	A 216–WCC	A 217–WC6	A 217–WC9	A 217–C5	C9	C12	A 352–LCB	A 352–LCC
RETAINER SCREW	A 276–316		A 276–316		A 276–316			A 276–316	
O–RING (INNER)	VITON		VITON		VITON			VITON	
O–RING (OUTER)	VITON		VITON		VITON			VITON	
SEAT	VITON/PTFE/EPDM		VITON/PTFE/EPDM		VITON/PTFE/EPDM			VITON/PTFE/EPDM	
RETAINER	A 216–WCB	A 216–WCC	A 217–WC6	A 217–WC9	A 217–C5	C9	C12	A 352–LCB	A 352–LCC
GLAND PACKING	BRAIDED PTFE		BRAIDED PTFE		BRAIDED PTFE			BRAIDED PTFE	
HEX BOLT	A 276–304		A 276–304		A 276–304			A 276–304	
SPRING WASHER	A 240–304		A 240–304		A 240–304			A 240–304	
LOWER BUSH HOLDER	A 216–WCB	A 216–WCC	A 217–WC6	A 217–WC9	A 217–C5	C9	C12	A 352–LCB	A 352–LCC
LOWER BUSH	IS 305 GR.AB1		IS 305 GR.AB1		IS 305 GR.AB1			IS 305 GR.AB1	
GRUB SCREW	A 276–304		A 276–304		A 276–304			A 276–304	
LOCK NUT	A 276–304		A 276–304		A 276–304			A 276–304	
STEM NUT	IS 305 GR.AB1		IS 305 GR.AB1		IS 305 GR.AB1			IS 305 GR.AB1	
NON RISING STEM	A 276–304		A 276–304		A 276–304			A 276–304	
YOKE SUPPORT SHORT	A 276–304		A 276–304		A 276–304			A 276–304	
HAND WHEEL	CAST STEEL		CAST STEEL		CAST STEEL			CAST STEEL	
HAND WHEEL PIN	A 276–304		A 276–304		A 276–304			A 276–304	
GREASE NIPPLE	A 276–304		A 276–304		A 276–304			A 276–304	
YOKE TOP	A 216–WCB	A 216–WCC	A 217–WC6	A 217–WC9	A 217–C5	C9	C12	A 352–LCB	A 352–LCC
DRIVE BUSH	IS 305 GR.AB1		IS 305 GR.AB1		IS 305 GR.AB1			IS 305 GR.AB1	
YOKE SUPPORT LONG	A 276–304		A 276–304		A 276–304			A 276–304	
HEX BOLT	A 276–304		A 276–304		A 276–304			A 276–304	
SPRING WASHER	A 240–304		A 240–304		A 240–304			A 240–304	
GLAND	A 216–WCB	A 216–WCC	A 217–WC6	A 217–WC9	A 217–C5	C9	C12	A 352–LCB	A 352–LCC
GATE	A 240–304		A 240–304		A 240–304			A 240–304	
NYLOCK NUT (BODY & GLAND)	A 276–304		A 276–304		A 276–304			A 276–304	
HEX BOLT (BODY & GLAND)	A 276–304		A 276–304		A 276–304			A 276–304	
NPT PLUG (DRAIN PORT)	A 276–304		A 276–304		A 276–304			A 276–304	
BEARING	COMMERCIAL		COMMERCIAL		COMMERCIAL			COMMERCIAL	

BILL OF MATERIAL

PART NAME	A 351-CF8	CF8M	A 351-CF3	CF3M	A 351-CG8M	CG3M	A 351-CF8C	CN7M
BODY	A 351-CF8	A 351-CF8M	A 351-CF3	A 351-CF3M	A 351-CG8M	A 351-CG3M	A 351-CF8C	A 351-CN7M
RETAINER SCREW	A 276-316		A 276-316		A 276-316		A 276-316	
O-RING (INNER)	VITON		VITON		VITON		VITON	
O-RING (OUTER)	VITON		VITON		VITON		VITON	
SEAT	VITON/PTFE/EPDM		VITON/PTFE/EPDM		VITON/PTFE/EPDM		VITON/PTFE/EPDM	
RETAINER	A 351-CF8	A 351-CF8M	A 351-CF3	A 351-CF3M	A 351-CG8M	A 351-CG3M	A 351-CF8C	A 351-CN7M
GLAND PACKING	BRAIDED PTFE		BRAIDED PTFE		BRAIDED PTFE		BRAIDED PTFE	
HEX BOLT	A 276-304		A 276-304	A 276-316	A 276-316		A 276-316	
SPRING WASHER	A 240-304		A 240-304	A 240-316	A 240-316		A 240-316	
LOWER BUSH HOLDER	A 351-CF8	A 351-CF8M	A 351-CF3	A 351-CF3M	A 351-CG8M	A 351-CG3M	A 351-CF8C	A 351-CN7M
LOWER BUSH	IS 305 GR.AB1		IS 305 GR.AB1		IS 305 GR.AB1		IS 305 GR.AB1	
GRUB SCREW	A 276-304		A 276-304		A 276-304		A 276-304	
LOCK NUT	A 276-304	A 276-316	A 276-304L	A 276-316L	A 276-317	A 276-317L	A 276-347	ALLOY 20
STEM NUT	IS 305 GR.AB1		IS 305 GR.AB1		IS 305 GR.AB1		IS 305 GR.AB1	
NON RISING STEM	A 276-304	A 276-316	A 276-304L	A 276-316L	A 276-317	A 276-317L	A 276-347	ALLOY 20
YOKE SUPPORT SHORT	A 276-304	A 276-316	A 276-304L	A 276-316L	A 276-317	A 276-317L	A 276-347	ALLOY 20
HAND WHEEL	CAST STEEL		CAST STEEL		CAST STEEL		CAST STEEL	
HAND WHEEL PIN	A 276-304		A 276-304		A 276-304		A 276-304	
GREASE NIPPLE	A 276-304		A 276-304		A 276-304		A 276-304	
YOKE TOP	A 351-CF8	A 351-CF8M	A 351-CF3	A 351-CF3M	A 351-CG8M	A 351-CG3M	A 351-CF8C	A 351-CN7M
DRIVE BUSH	IS 305 GR.AB1		IS 305 GR.AB1		IS 305 GR.AB1		IS 305 GR.AB1	
YOKE SUPPORT LONG	A 276-304	A 276-316	A 276-304L	A 276-316L	A 276-317	A 276-317L	A 276-347	ALLOY 20
HEX BOLT	A 276-304		A 276-304	A 276-316	A 276-316		A 276-316	
SPRING WASHER	A 240-304		A 240-304	A 240-316	A 240-316		A 240-316	
GLAND	A 351-CF8	A 351-CF8M	A 351-CF3	A 351-CF3M	A 351-CG8M	A 351-CG3M	A 351-CF8C	A 351-CN7M
GATE	A 240-304	A 240-316	A 240-304L	A 240-316L	A 240-317	A 240-317L	A 240-347	ALLOY 20
NYLOCK NUT (BODY & GLAND)	A 276-304		A 276-304	A 276-316	A 276-316		A 276-316	
HEX BOLT (BODY & GLAND)	A 276-304		A 276-304	A 276-316	A 276-316		A 276-316	
NPT PLUG (DRAIN PORT)	A 276-304	A 276-316	A 276-304L	A 276-316L	A 276-317	A 276-317L	A 276-347	ALLOY 20
BEARING	COMMERCIAL		COMMERCIAL		COMMERCIAL		COMMERCIAL	

BILL OF MATERIAL

PART NAME	A 351-CK3MCuN	A 351-CN3MN	A 995-4A	A 995-6A	A 494-CZ100	A 494-M35-1	A 494-CW12MW	A 494-CW6MC
BODY	A 351–CK3MCuN	A 351–CN3MN	A 995–4A	A 995–6A	A 494–CZ100	A 494–M35–1	A 494–CW12MW	A 494–CW6MC
RETAINER SCREW	A 276–316		A 276–316		A 276–316		A 276–316	
O–RING (INNER)	VITON		VITON		VITON		VITON	
O–RING (OUTER)	VITON		VITON		VITON		VITON	
SEAT	VITON/PTFE/EPDM		VITON/PTFE/EPDM		VITON/PTFE/EPDM		VITON/PTFE/EPDM	
RETAINER	A 351–CK3MCuN	A 351–CN3MN	A 995–4A	A 995–6A	A 494–CZ100	A 494–M35–1	A 494–CW12MW	A 494–CW6MC
GLAND PACKING	BRAIDED PTFE		BRAIDED PTFE		BRAIDED PTFE		BRAIDED PTFE	
HEX BOLT	A 276–316		A 276–316		A 276–316		A 276–316	
SPRING WASHER	A 240–316		A 240–316		A 240–316		A 240–316	
LOWER BUSH HOLDER	A 351–CK3MCuN	A 351–CN3MN	A 995–4A	A 995–6A	A 494–CZ100	A 494–M35–1	A 494–CW12MW	A 494–CW6MC
LOWER BUSH	IS 305 GR.AB1		IS 305 GR.AB1		IS 305 GR.AB1		IS 305 GR.AB1	
GRUB SCREW	A 276–304		A 276–304		A 276–304		A 276–304	
LOCK NUT	S31254	AL6XN	S31803	S32760	UNS N02200	UNS N04400	UNS N10002	UNS N06625
STEM NUT	IS 305 GR.AB1		IS 305 GR.AB1		IS 305 GR.AB1		IS 305 GR.AB1	
NON RISING STEM	S31254	AL6XN	S31803	S32760	UNS N02200	UNS N04400	UNS N10002	UNS N06625
YOKE SUPPORT SHORT	S31254	AL6XN	S31803	S32760	UNS N02200	UNS N04400	UNS N10002	UNS N06625
HAND WHEEL	CAST STEEL		CAST STEEL		CAST STEEL		CAST STEEL	
HAND WHEEL PIN	A 276–304		A 276–304		A 276–304		A 276–304	
GREASE NIPPLE	A 276–304		A 276–304		A 276–304		A 276–304	
YOKE TOP	A 351–CK3MCuN	A 351–CN3MN	A 995–4A	A 995–6A	A 494–CZ100	A 494–M35–1	A 494–CW12MW	A 494–CW6MC
DRIVE BUSH	IS 305 GR.AB1		IS 305 GR.AB1		IS 305 GR.AB1		IS 305 GR.AB1	
YOKE SUPPORT LONG	S31254	AL6XN	S31803	S32760	UNS N02200	UNS N04400	UNS N10002	UNS N06625
HEX BOLT	A 276–316		A 276–316		A 276–316		A 276–316	
SPRING WASHER	A 240–316		A 240–316		A 240–316		A 240–316	
GLAND	A 351–CK3MCuN	A 351–CN3MN	A 995–4A	A 995–6A	A 494–CZ100	A 494–M35–1	A 494–CW12MW	A 494–CW6MC
GATE	S31254	AL6XN	S31803	S32760	UNS N02200	UNS N04400	UNS N10002	UNS N06625
NYLOCK NUT (BODY & GLAND)	A 276–316		A 276–316		A 276–316		A 276–316	
HEX BOLT (BODY & GLAND)	A 276–316		A 276–316		A 276–316		A 276–316	
NPT PLUG (DRAIN PORT)	S31254	AL6XN	S31803	S32760	UNS N02200	UNS N04400	UNS N10002	UNS N06625
BEARING	COMMERCIAL		COMMERCIAL		COMMERCIAL		COMMERCIAL	

NOTES:-

ANY GRADES IN ASTM A216 , A217 , A351 , A352 , A 995, A 494

CAN BE OFFERED LIKE GIVEN IN THE TABLE

DIMENSION

CWP 150														
SIZE	INCH	2	3	4	5	6	8	10	12	14	16	18	20	24
	mm	50	80	100	127	150	200	250	300	350	400	450	500	600
A	INCH	1.88	2.00	2.00	2.25	2.25	2.75	2.75	3.00	3.00	3.50	3.50	4.50	4.50
	mm	47.8	50.8	50.8	57.2	57.2	69.9	69.9	76.2	76.2	88.9	88.9	114.3	114.3
ØB	INCH	2.00	3.00	4.00	5.00	6.00	8.00	10.00	12.00	13.25	15.25	17.25	19.25	23.25
	mm	50.8	76.2	101.6	127.0	152.4	203.0	254.0	304.8	336.5	387.3	438.1	488.9	590.5
C	INCH	13.5	16.3	19.0	21.0	23.0	28.0	34.0	39.0	43.0	50.0	55.0	60.3	69.8
	mm	343	414	483	533	584	711	864	991	1092	1270	1397	1532	1773
ØD	INCH	8.0	8.0	10.0	10.0	12.0	14.0	16.0	16.8	18.0	18.0	20.0	20.0	25.0
	mm	203	203	254	254	305	356	406	426	457	457	508	508	635
ØF	INCH	4.75	6.00	7.50	8.50	9.50	11.75	14.25	17.00	18.75	21.25	22.75	25.00	29.50
	mm	120.7	152.4	190.5	215.9	241.3	298.5	362.0	431.8	476.3	539.8	577.9	635.0	749.3
E	INCH mm	5/8	5/8	5/8	3/4	3/4	3/4	7/8	7/8	1	1	1 1/8	1 1/8	1 1/4
N	INCH mm	4	4	8	8	8	8	12	12	12	16	16	20	20

SEAT
SIDE

VALVES WORKING WELL ON LINE IN OUR CUSTOMER PLACE FOR PAST 12 YEARS

Sri Ranganathar Valves (P) Ltd

7/109 – Thennampalayam Pirivu, Arasur,
Coimbatore – 641407
Tamilnadu, India.

Phone : +91 422 433 5999
Mobile : +91 99528 44102
Email: srv@sriindia.net